AMERICAN SPECIALTIES, INC. *441 Saw Mill River Road, Yonkers, NY 10701 (914) 476-9000*	MODEL No:	0318
	ISSUED:	01-87
	REVISED:	04-08

COMBINATION SOAP DISPENSER AND SHELF

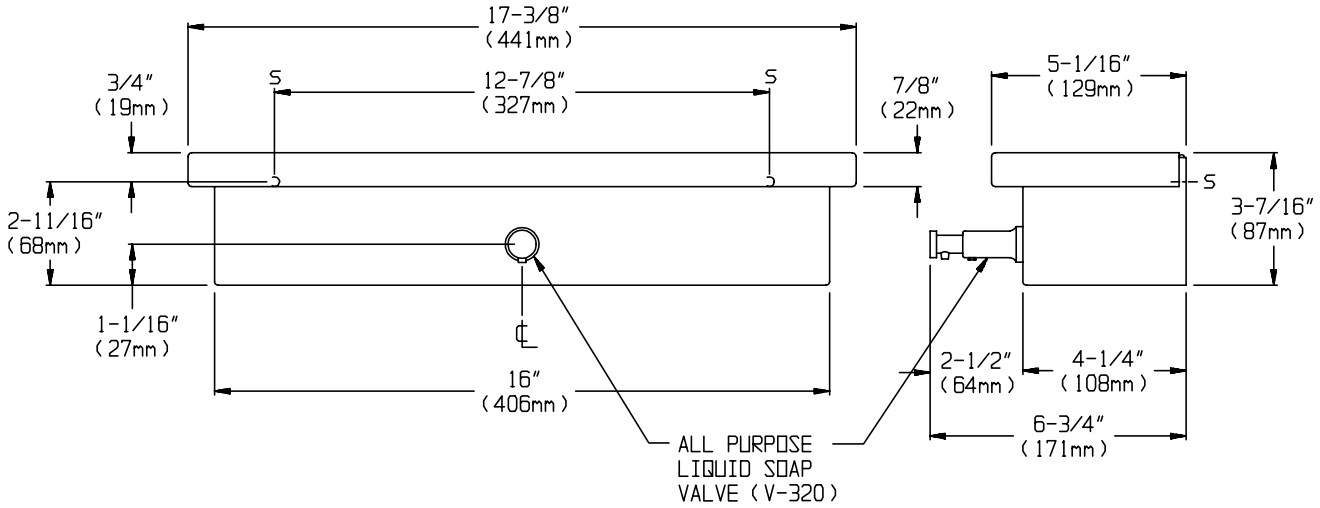

SPECIFICATION

Combination Soap Dispenser and Shelf shall hold and dispense 83 oz or 2.6 quarts (2.5 liters) of liquid and lotion soaps, synthetic detergents and antibacterial soaps containing PCMX and/orTriclosan. Dispenser tank and shelf/cover shall be fabricated of alloy 18-8 stainless steel, type 304. Holding tank shall be fabricated as a welded integral unit; tank and shelf/cover shall be 18 gauge. All exposed surfaces shall be № 4 satin finish and be protected during shipment with a PVC film easily removable after installation. Shelf/cover shall be held closed with a concealed latch. Valve operation shall comply with ADA Accessibility Guidelines by requiring no more than 5 lbs_f (22.2 Newtons) pressure to actuate and require no grasping or twisting by operator. Valve shall have a chrome-plated brass body with stainless steel and plastic internal parts.

Combination Soap Dispenser and Shelf shall be Model № 0318 of American Specialties, Inc., 441 Saw Mill River Road, Yonkers, New York 10701-4913.

INSTALLATION

Unit is mounted on wall using two (2) №10 screws (by others) through concealed mounting holes in tank back. For compliance with ADA Accessibility Guidelines, unit should be installed so that dispenser valve is 44" (1118mm) maximum above finished floor.

OPERATION

Soap is manually dispensed by pushing valve button until supply is depleted. Unit may be reloaded easily by opening hinged shelf/cover. Tank supply is replenished manually on cycle determined by maintenance needs.