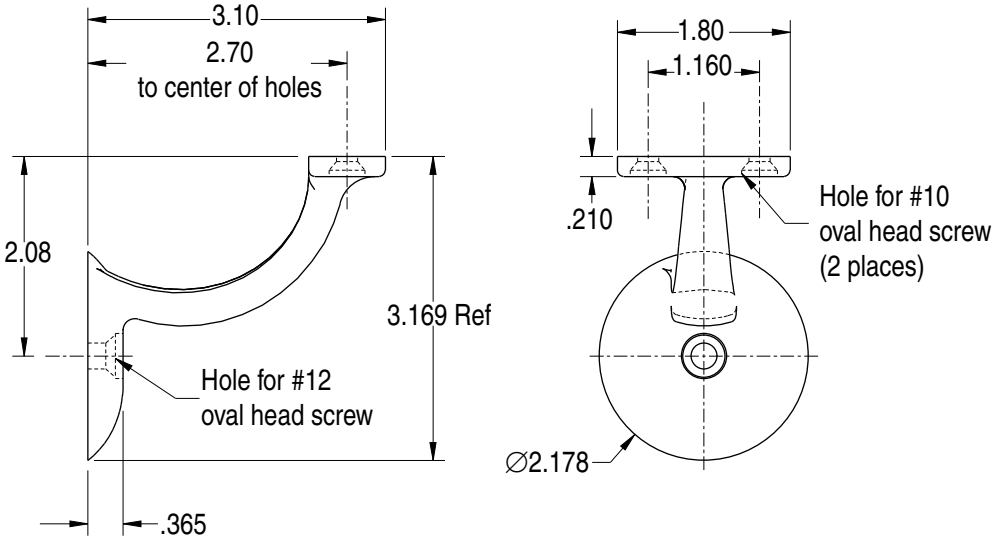
3.10
2.70
to center of holes
2.08
3.169 Ref
Hole for #12
oval head screw
.365
1.80
1.160
.210
Hole for #10
oval head screw
(2 places)
∅2.178